Genie® GS™-2032 & GS-2046

Specifications

Models	GS-2032	GS-2046 E-Drive
Working height max. - indoor[1]	8.13 m	8.13 m
Working height max. - outdoor[1]	6.88 m	6.98 m
A Platform height max. - indoor	6.13 m	6.13 m
A Platform height max. - outdoor	4.88 m	4.98 m
B Platform height - stowed	1.07 m	1.07 m
C Platform length - outside	2.26 m	2.26 m
C Platform length - outside, extended	3.18 m	3.18 m
Slide-out platform extension deck - length	0.91 m	0.91 m
D Platform width - outside	0.81 m	1.16 m
Guardrail height	1.10 m	1.10 m
Toeboard height	15 cm	15 cm
E Height - stowed (folding rails)	2.18 m	2.18 m
E Height - stowed (rails lowered)	1.80 m	1.57 m
F Length machine - stowed	2.44 m	2.44 m
F Length machine - stowed, extended	3.33 m	3.33 m
G Width	0.81 m	1.16 m
H Wheelbase	1.85 m	1.85 m
I Ground clearance (center) - pothole guards retracted	12 cm	12 cm
I Ground clearance - pothole guards deployed	2.30 cm	2.30 cm
Productivity		
Max. platform occupancy (in/out)	2/1	2/1
Lift capacity	363 kg	544 kg
Lift capacity - extension deck extended	113 kg	113 kg
Max. platform drive height	6.13 m	6.13 m
Drive speed - stowed	3.2 km/h	3.2 km/h
Drive speed - raised	0.8 km/h	0.8 km/h
Gradeability - stowed[2]	30 %	25 %
Turning radius - inside/outside	0/2.13 m	0/2.29 m
Lifting speed - raise/lower	41/33 sec	32/26 sec
Tilt sensor activation (front to back/side to side)	3° / 1.5°	3° / 1.5°
Tires - solid non-marking	38×13 cm	38×13 cm
Power		
Power - FLA	24V DC (4×6V 225Ah)	24V DC (4×6V 225Ah)
Power - Lithium-Ion	24V DC (1×24V 90Ah)	24V DC (1×24V 90Ah)
Hydraulic tank capacity (E-Drive)	15 L	15 L
Hydraulic tank capacity (hydraulic drive)	17 L	-
Weight[3] and Floor Loading[4]		
Weight	1,832 kg	1,775 kg
Tire load max.	767 kg	915 kg
Tire contact pressure	766 kPa	938 kPa
Occupied floor pressure	11.82 kPa	8.63 kPa
Sound and Vibration Levels		
Sound Pressure level (ground workstation)	< 70 dBA	< 70 dBA
Sound Pressure level (platform workstation)	< 70 dBA	< 70 dBA
Vibrations	< 2.5 m/s²	< 2.5 m/s²

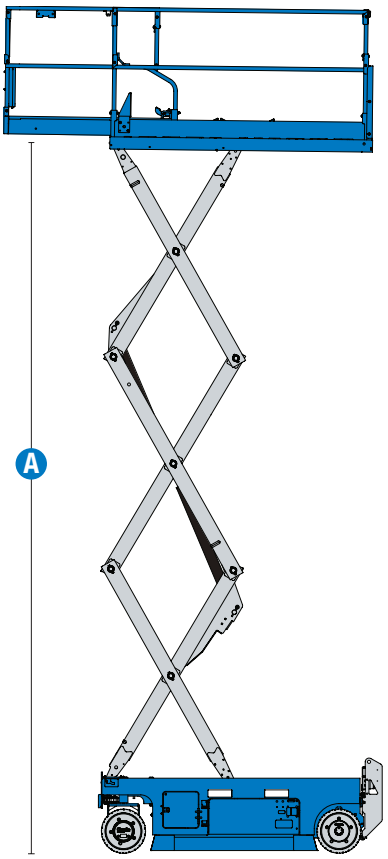

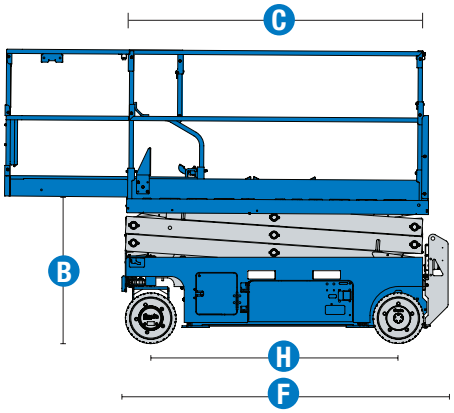

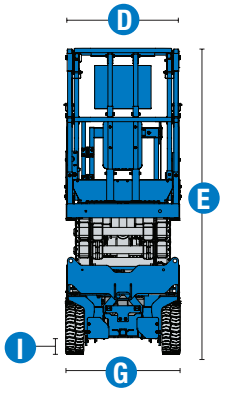

(1) The metric equivalent of working height adds 2 m to platform height. US adds 6 ft to platform height.
(2) Gradeability applies to driving on slopes and may vary depending on options and machine configurations. See operator's manual for details regarding slope ratings.
(3) Weight refers to standard configuration and may vary depending on options and/or country standards.
(4) Floor loading information is approximate and may vary depending on options and machine configurations. It should be used only with adequate safety factors.

Genie® GS™-2032 & GS-2046

SKU: Standard Model

- GS-2032, E-Drive*
- GS-2032, Hydraulic drive*

* Build to Order

SKU: Standard Model

- GS-2046, E-Drive*

Option availability		S	S+	BtO
Power	Standard FLA flooded lead acid batteries			✔
	AGM Maintenance-free batteries			❍
	Lithium-Ion battery			❍
	Drive cut-out while charging			❍
	Power Inverter			❍
	Rear recessed charger receptacle			✔
Platform	Folding rails, Full-height swing gate (GS-2046)			✔
	Folding rails, Half-height swing gate (GS-2032)			✔
	Slide out extension deck			✔
	Air line to platform			❍
	Automotive-style horn			❍
	AC power to platform			✔
	Descent, tilt and motion alarm			✔
	Diamond plate platform deck			✔
	Dual LED flashing beacons			✔
	Electric horn			✔
	Lanyard attachment points			✔
	Platform control guard (PCON)			✔
	Platform load sense system			✔
	Proportional drive and lift			✔
	SmartLink dual zone control system			✔
Chassis	Lift Connect Telematics			❍
	Lift Connect with Access Manager upgrade			❍
	Biodegradable hydraulic oil			❍
	Lift Guard White Noise Alarm			❍
	Lift Tools Spill Guard (E-Drive)			❍
	Auxiliary platform lowering			✔
	Driveable at full height			✔
	Dual front wheel sealed AC electric drive motors (E-Drive)			✔
	Dual wheel multi-disc brakes			✔
	Electric brake release (E-Drive)			✔
	Manual brake release (Hydraulic Drive)			✔
	On board diagnostic system with battery charge indicator			✔
	Pothole protection			✔
	Side and rear fork pockets			✔
	Solid non-marking tires			✔
	Tech Pro Link connector			✔
	Tie-down and lifting points			✔

Required options for Korea: Locking Keyswitch, Foot Switch + uplimit switch harness, Drive Disable, Steel Plate - GCON/PCON, AL PCON Bracket, Isolator (rubber cushions)

S Standard
S+ Standard +
BtO Build to Order
✔ Standard Features
❍ Options

Indoor & Outdoor Use

Side Forklift Pockets

Optional E-Drive

Genie Genuine Accessories(1)

- Lift Tools Productivity Tools
- Lift Connect Telematics
- Tech Pro Link Handheld Device

(1) More accessories available from Genie Genuine Parts.

Product specifications are subject to change without notice or obligation. Photographs and/or drawings herein are for illustrative purposes only. Refer to the appropriate Operator's Manual for instructions on proper equipment use. Failure to follow instructions in the Operator's Manual may result in serious injury or death. The only warranty applicable to our equipment is the standard written warranty applicable to the particular product and sale and we make no other warranty, express or implied. Products and services listed may be trademarks, service marks or trade names of Terex Corporation and/or their subsidiaries in the USA and many other countries. Terex, Genie, Quality By Design, Xtra Capacity, Lift Power, Lift Guard, Lift Tools, Lift Connect and Tech Pro Link are registered trademarks of Terex Corporation or its subsidiaries.

08/22

© 2022 Terex Corporation